UNIVERSITY OF CAMBRIDGE INTERNATIONAL EXAMINATIONS
General Certificate of Education Advanced Level

CANDIDATE NAME									
CENTRE NUMBER						CANDIDATE NUMBER				

9172174829

PHYSICS **9702/04**

Paper 4 A2 Structured Questions **October/November 2008**

1 hour 45 minutes

Candidates answer on the Question Paper.

No Additional Materials are required.

READ THESE INSTRUCTIONS FIRST

Write your Centre number, candidate number and name on all the work you hand in.
Write in dark blue or black pen.
You may use a soft pencil for any diagrams, graphs or rough working.
Do not use staples, paper clips, highlighters, glue or correction fluid.
DO **NOT** WRITE IN ANY BARCODES.

Answer **all** questions.
You may lose marks if you do not show your working or if you do not use appropriate units.

At the end of the examination, fasten all your work securely together.
The number of marks is given in brackets [ ] at the end of each question or part question.

For Examiner's Use	
1	
2	
3	
4	
5	
6	
7	
8	
9	
10	
11	
Total	

This document consists of **21** printed pages and **3** blank pages.

© UCLES 2008

Data

speed of light in free space,	$c = 3.00 \times 10^{8}\ \text{m s}^{-1}$
permeability of free space,	$\mu_0 = 4\pi \times 10^{-7}\ \text{H m}^{-1}$
permittivity of free space,	$\varepsilon_0 = 8.85 \times 10^{-12}\ \text{F m}^{-1}$
elementary charge,	$e = 1.60 \times 10^{-19}\ \text{C}$
the Planck constant,	$h = 6.63 \times 10^{-34}\ \text{J s}$
unified atomic mass constant,	$u = 1.66 \times 10^{-27}\ \text{kg}$
rest mass of electron,	$m_e = 9.11 \times 10^{-31}\ \text{kg}$
rest mass of proton,	$m_p = 1.67 \times 10^{-27}\ \text{kg}$
molar gas constant,	$R = 8.31\ \text{J K}^{-1}\ \text{mol}^{-1}$
the Avogadro constant,	$N_A = 6.02 \times 10^{23}\ \text{mol}^{-1}$
the Boltzmann constant,	$k = 1.38 \times 10^{-23}\ \text{J K}^{-1}$
gravitational constant,	$G = 6.67 \times 10^{-11}\ \text{N m}^2\ \text{kg}^{-2}$
acceleration of free fall,	$g = 9.81\ \text{m s}^{-2}$

© UCLES 2008

Formulae

uniformly accelerated motion, $s = ut + \frac{1}{2}at^2$

$v^2 = u^2 + 2as$

work done on/by a gas, $W = p\Delta V$

gravitational potential, $\phi = -\frac{Gm}{r}$

hydrostatic pressure, $p = \rho gh$

pressure of an ideal gas, $p = \frac{1}{3}\frac{Nm}{V}\langle c^2 \rangle$

simple harmonic motion, $a = -\omega^2 x$

velocity of particle in s.h.m., $v = v_0 \cos \omega t$

$v = \pm \omega \sqrt{(x_0^2 - x^2)}$

electric potential, $V = \frac{Q}{4\pi\varepsilon_0 r}$

capacitors in series, $1/C = 1/C_1 + 1/C_2 + \ldots$

capacitors in parallel, $C = C_1 + C_2 + \ldots$

energy of charged capacitor, $W = \frac{1}{2}QV$

resistors in series, $R = R_1 + R_2 + \ldots$

resistors in parallel, $1/R = 1/R_1 + 1/R_2 + \ldots$

alternating current/voltage, $x = x_0 \sin \omega t$

radioactive decay, $x = x_0 \exp(-\lambda t)$

decay constant, $\lambda = \frac{0.693}{t_{\frac{1}{2}}}$

© UCLES 2008

Section A

Answer **all** the questions in the spaces provided.

1 A spherical planet has mass M and radius R.
The planet may be assumed to be isolated in space and to have its mass concentrated at its centre.
The planet spins on its axis with angular speed ω, as illustrated in Fig. 1.1.

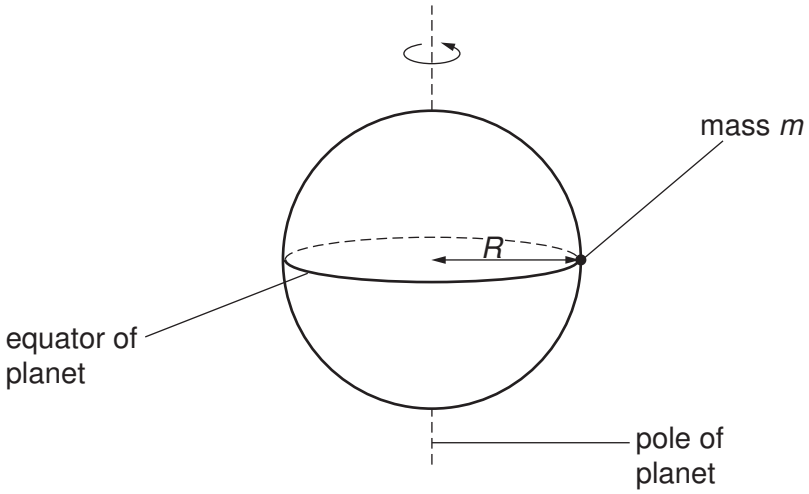

Fig. 1.1

A small object of mass m rests on the equator of the planet. The surface of the planet exerts a normal reaction force on the mass.

(a) State formulae, in terms of M, m, R and ω, for

(i) the gravitational force between the planet and the object,

.....[1]

(ii) the centripetal force required for circular motion of the small mass,

.....[1]

(iii) the normal reaction exerted by the planet on the mass.

.....[1]

(b) (i) Explain why the normal reaction on the mass will have different values at the equator and at the poles.

.....

.....

.....[2]

(ii) The radius of the planet is 6.4×10^6 m. It completes one revolution in 8.6×10^4 s. Calculate the magnitude of the centripetal acceleration at

1. the equator,

acceleration = ...m s^{-2} [2]

2. one of the poles.

acceleration = ...m s^{-2} [1]

(c) Suggest two factors that could, in the case of a real planet, cause variations in the acceleration of free fall at its surface.

1. .....

.....

2. .....

.....
[2]

2 **(a)** Define *specific latent heat of fusion*.

.....

.....

.....[2]

(b) Some crushed ice at 0 °C is placed in a funnel together with an electric heater, as shown in Fig. 2.1.

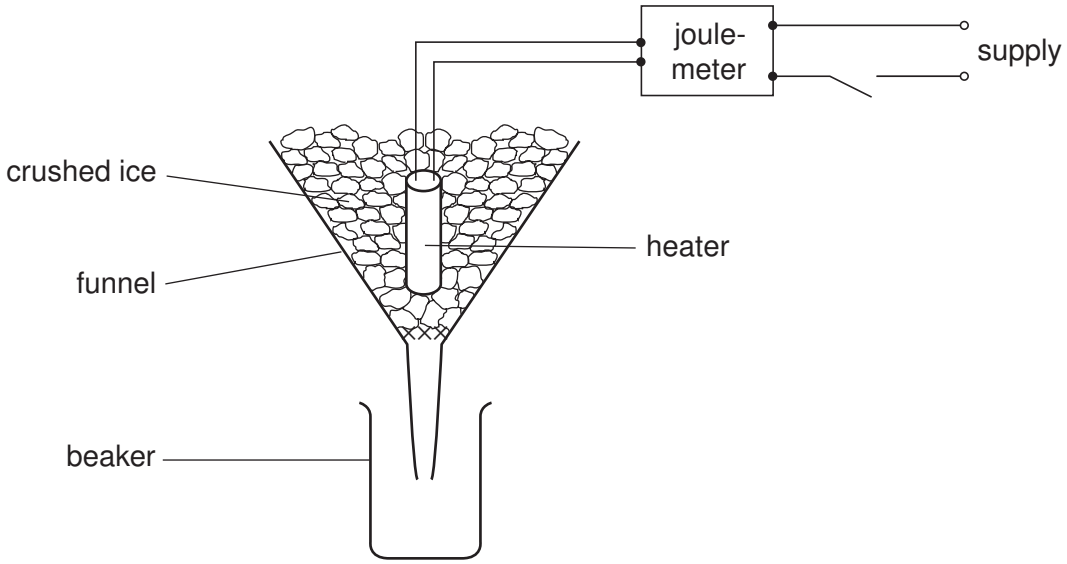

Fig. 2.1

The mass of water collected in the beaker in a measured interval of time is determined with the heater switched off. The mass is then found with the heater switched on. The energy supplied to the heater is also measured.
For both measurements of the mass, water is not collected until melting occurs at a constant rate.
The data shown in Fig. 2.2 are obtained.

	mass of water / g	energy supplied to heater / J	time interval / min
heater switched off	16.6	0	10.0
heater switched on	64.7	18000	5.0

Fig. 2.2

(i) State why the mass of water is determined with the heater switched off.

.....

.....[1]

© UCLES 2008

(ii) Suggest how it can be determined that the ice is melting at a constant rate.

.....

.....[1]

(iii) Calculate a value for the specific latent heat of fusion of ice.

latent heat = ... kJ kg^{-1} [3]

3 The needle of a sewing machine is made to oscillate vertically through a total distance of 22 mm, as shown in Fig. 3.1.

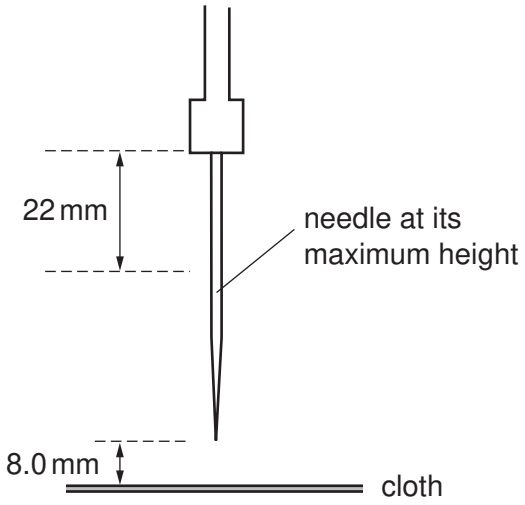

Fig. 3.1

The oscillations are simple harmonic with a frequency of 4.5 Hz.
The cloth that is being sewn is positioned 8.0 mm below the point of the needle when the needle is at its maximum height.

(a) State what is meant by *simple harmonic motion*.

.....

.....

.....[2]

(b) The displacement y of the point of the needle may be represented by the equation

$$y = a\cos\omega t.$$

(i) Suggest the position of the point of the needle at time $t = 0$.

.....[1]

(ii) Determine the values of

1. a,

$a =$ ..... mm [1]

2. ω.

$\omega =$ ..... rad s^{-1} [2]

© UCLES 2008

(c) Calculate, for the point of the needle,

(i) its maximum speed,

speed = ... $m\,s^{-1}$ [2]

(ii) its speed as it moves downwards through the cloth.

speed = ... $m\,s^{-1}$ [3]

4 **(a)** Write down an equation to represent the first law of thermodynamics in terms of the heating q of a system, the work w done on the system and the increase ΔU in the internal energy.

.....[1]

(b) The pressure of an ideal gas is decreased at constant temperature.
Explain what change, if any, occurs in the internal energy of the gas.

.....

.....

.....

.....[3]

5 Two deuterium ($^2_1$H) nuclei are travelling directly towards one another. When their separation is large compared with their diameters, they each have speed v as illustrated in Fig. 5.1.



Fig. 5.1

The diameter of a deuterium nucleus is 1.1×10^{-14} m.

(a) Use energy considerations to show that the initial speed v of the deuterium nuclei must be approximately 2.5×10^6 m s^{-1} in order that they may come into contact.
Explain your working.

[3]

(b) For a fusion reaction to occur, the deuterium nuclei must come into contact.
Assuming that deuterium behaves as an ideal gas, deduce a value for the temperature of the deuterium such that the nuclei have an r.m.s. speed equal to the speed calculated in **(a)**.

temperature = ... K [4]

(c) Comment on your answer to **(b)**.

.....

.....[1]

6 A simple iron-cored transformer is illustrated in Fig. 6.1.

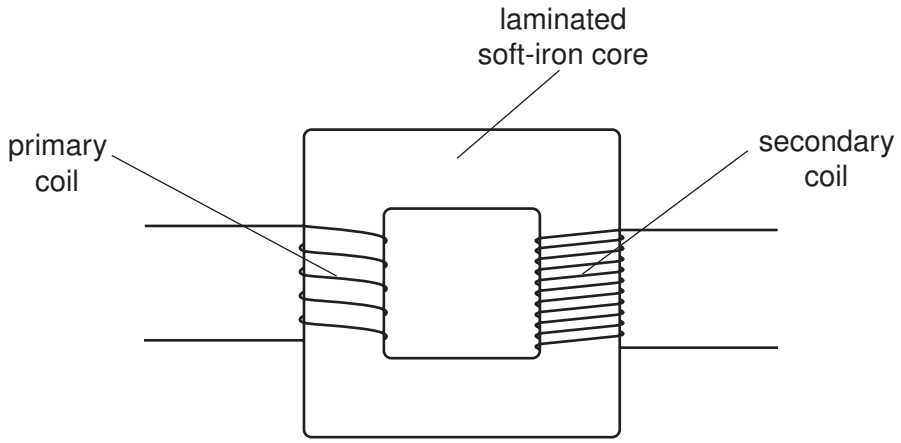

Fig. 6.1

(a) Suggest why the core is

(i) a continuous loop,

.....

.....[1]

(ii) laminated.

.....

.....

.....[2]

(b) (i) State Faraday's law of electromagnetic induction.

.....

.....

.....[2]

(ii) Use Faraday's law to explain the operation of the transformer.

.....

.....

.....

.....[3]

© UCLES 2008

(c) State two advantages of the use of alternating voltages for the transmission and use of electrical energy.

1. .....

.....

2. .....

.....

[2]

7 **(a)** State three pieces of evidence provided by the photoelectric effect for a particulate nature of electromagnetic radiation.

1. .....

.....

2. .....

.....

3. .....

.....

[3]

(b) **(i)** Briefly describe the concept of a photon.

.....

.....

.....[2]

(ii) Explain how lines in the emission spectrum of gases at low pressure provide evidence for discrete electron energy levels in atoms.

.....

.....

.....[2]

© UCLES 2008

(c) Three electron energy levels in atomic hydrogen are represented in Fig. 7.1.

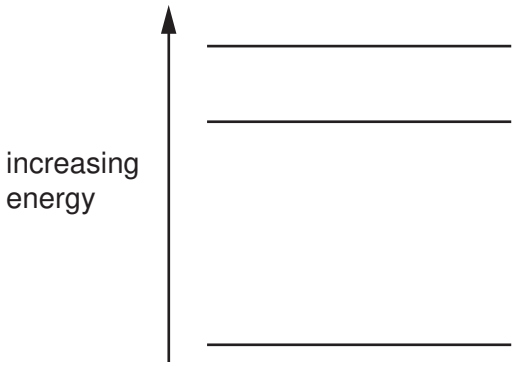

Fig. 7.1

The wavelengths of the spectral lines produced by electron transitions between these three energy levels are 486 nm, 656 nm and 1880 nm.

(i) On Fig. 7.1, draw arrows to show the electron transitions between the energy levels that would give rise to these wavelengths.
Label each arrow with the wavelength of the emitted photon. [3]

(ii) Calculate the maximum change in energy of an electron when making transitions between these levels.

energy = ... J [3]

© UCLES 2008

[Turn over

8 **(a)** Describe what is meant by a *magnetic field.*

.....

.....

.....

.....

.....[3]

(b) A small mass is placed in a field of force that is either electric or magnetic or gravitational.
State the nature of the field of force when the mass is

(i) charged and the force is opposite to the direction of the field,

.....[1]

(ii) uncharged and the force is in the direction of the field,

.....[1]

(iii) charged and there is a force only when the mass is moving,

.....[1]

(iv) charged and there is no force on the mass when it is stationary or moving in a particular direction.

.....[1]

© UCLES 2008

Section B

Answer **all** the questions in the spaces provided.

9 Different frequencies and wavelengths are used in different channels of communication. Suggest why

(a) infra-red radiation rather than visible light is usually used with optic fibres,

.....

.....

.....[2]

(b) the base stations in mobile phone networks operate on UHF,

.....

.....

.....[2]

(c) for satellite communication, frequencies of the order of GHz are used, with the uplink having a different frequency to the downlink.

.....

.....

.....[2]

10 (a) The circuit for an amplifier incorporating an ideal operational amplifier (op-amp) is shown in Fig. 10.1.

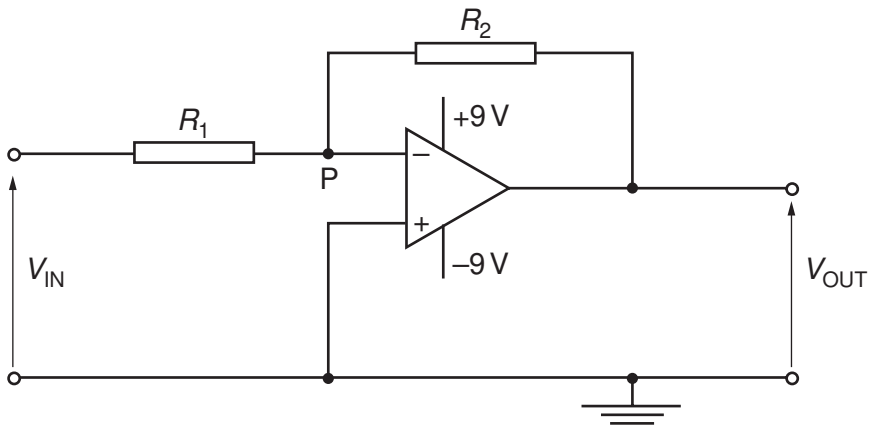

Fig. 10.1

(i) State

1. the name of this type of amplifier circuit,

.....[1]

2. why the point P is referred to as a *virtual earth*.

.....

.....

.....

.....[3]

(ii) Show that the gain G of this amplifier circuit is given by the expression

$$G = -\frac{R_2}{R_1}.$$

Explain your working.

[4]

© UCLES 2008

(b) The circuit of Fig. 10.1 is modified by connecting a light-dependent resistor (LDR) as shown in Fig. 10.2.

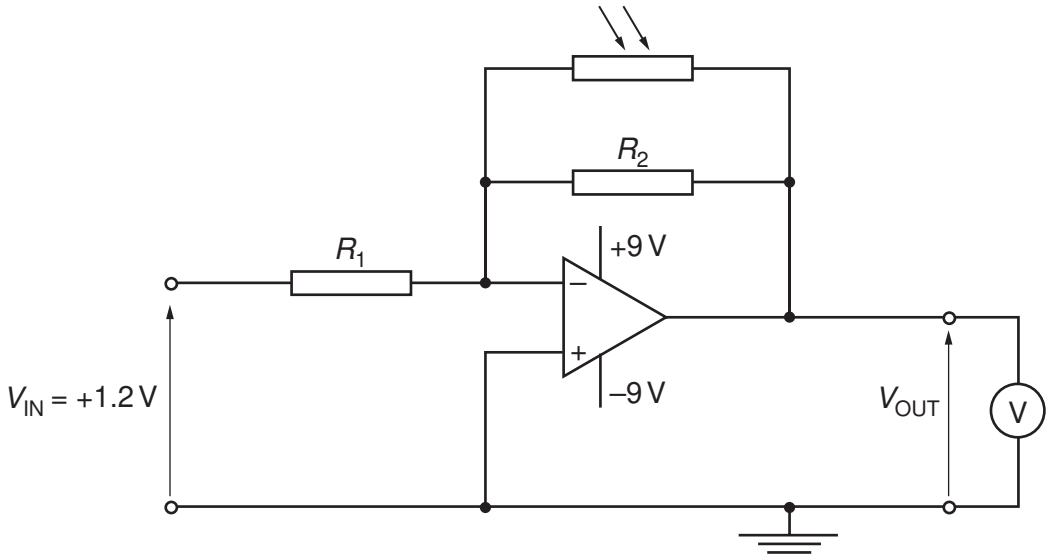

Fig. 10.2

The resistances R_1 and R_2 are 5.0 kΩ and 50 kΩ respectively.
The input voltage V_{IN} is +1.2V. A high-resistance voltmeter measures the output V_{OUT}.
The circuit is used to monitor low light intensities.

(i) Determine the voltmeter reading for light intensities such that the LDR has a resistance of

1. 100 kΩ,

reading = ... V [3]

2. 10 kΩ.

reading = ... V [2]

(ii) The light incident on the LDR is provided by a single lamp. Use your answers in **(i)** to describe and explain qualitatively the variation of the voltmeter reading as the lamp is moved away from the LDR.

.....

.....

.....

.....

.....[3]

11 **(a)** Distinguish between the images produced by CT scanning and X-ray imaging.

.....

.....

.....

.....[3]

(b) By reference to the principles of CT scanning, suggest why CT scanning could not be developed before powerful computers were available.

.....

.....

.....

.....

.....

.....

.....[5]

BLANK PAGE

BLANK PAGE

BLANK PAGE

Permission to reproduce items where third-party owned material protected by copyright is included has been sought and cleared where possible. Every reasonable effort has been made by the publisher (UCLES) to trace copyright holders, but if any items requiring clearance have unwittingly been included, the publisher will be pleased to make amends at the earliest possible opportunity.

University of Cambridge International Examinations is part of the Cambridge Assessment Group. Cambridge Assessment is the brand name of University of Cambridge Local Examinations Syndicate (UCLES), which is itself a department of the University of Cambridge.